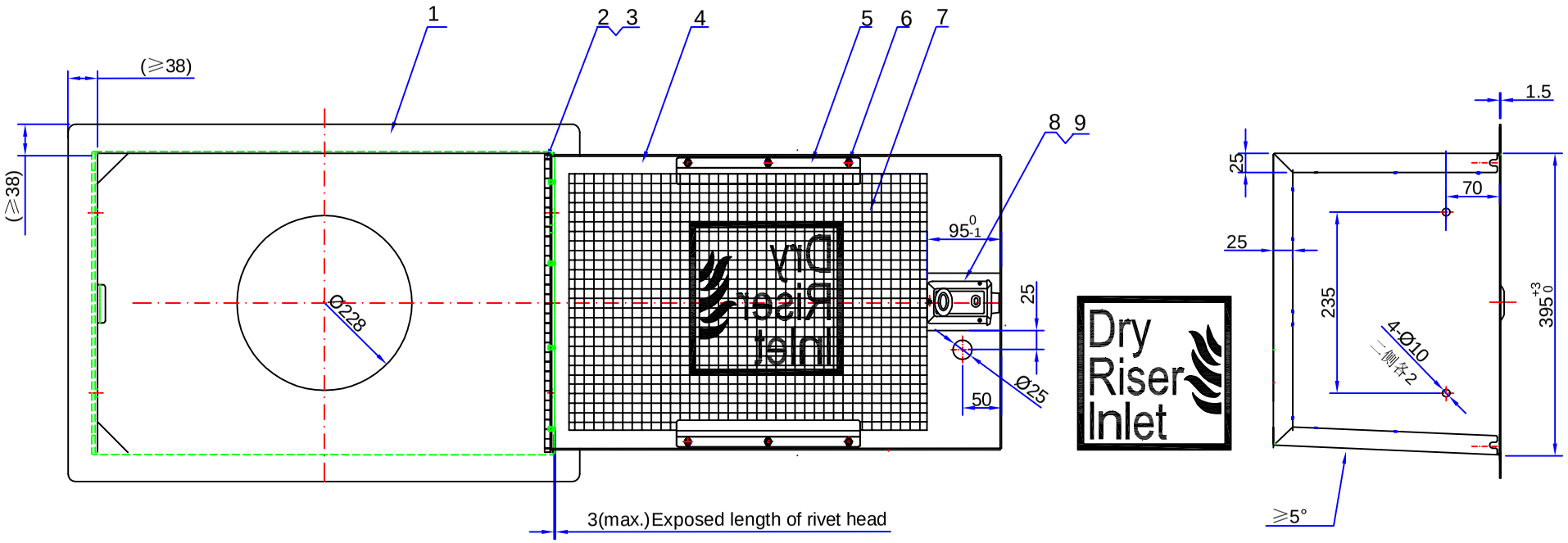

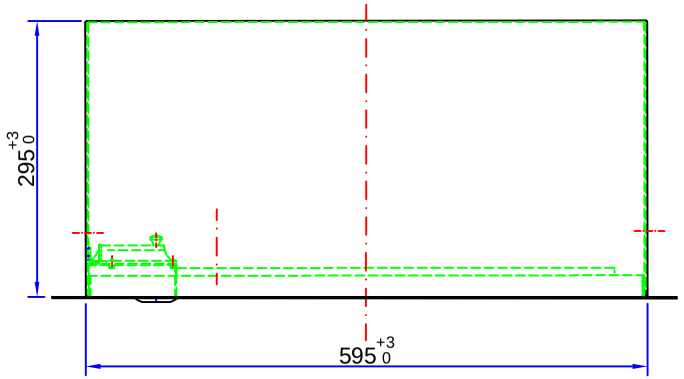

Technical Requirements:

1. Cabinet shell and door is connected with hinges and the door and hinges are connected through using d3.2 blind rivets(per picture shown);
2. When the cabinet is locked in close, the door shall be flush with cabinet; and the door opening angle shall be more than 180°;
3. When there is no key to open and in urgent use, just break the wire glass and directly open the latch lock by hand from inside.

No.	Drawing No.	Name	Q'TY	Material	Weight	Remark
10	DLX01-035-03-Y01	Marking	1			
9	GB/T818-2000	M4×16 Pan head screw	3	Steel		Galvanized
8	DLX02-037A	Latch lock	1	Assembly		
7	DLX01-042B-03	Wire glass	1	Glass 465×340×6mm		
6	GB/T6182-2000	M5 Hexagon locking nut	6	Copper		Nickel plating
5	DLX02-039A	Press plate	1	SUS304		
4	DLX01-042B-02	Door	1	SUS304		
3	GB12618-90	Blind rivet d 3.2	8	Aluminium		
2	DLX02-040	Hinge	1	SUS304		
1	DLX01-042B-01	Cabinet shell	1	SUS304		

Zone	Revision note	Date	Signature

Drawn | Audit
Checked | Approved

395×595×295
Fire Cabinet

Assembly

Code No.
HC011

W.T. ~14.5Kg | Scale

Hydrotech