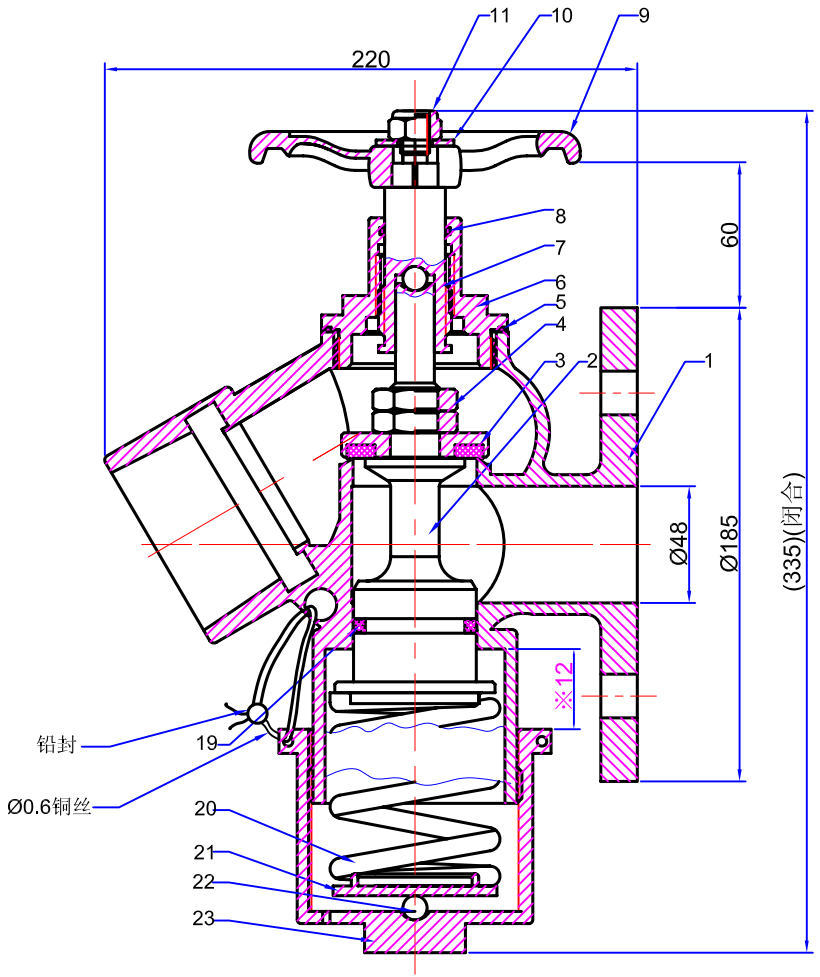

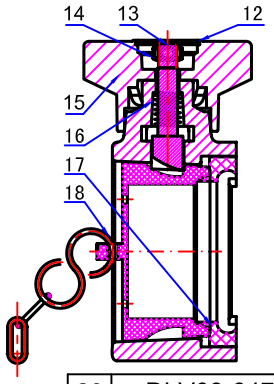

No.	Drawing No.	Name	Q'TY	Material	Weight	Remark
23	DLV03-047-12	Cap	1	LG2		
22		10MM steel ball	2	Steel（Galvanized）		
21	DLV03-047-11	spring stop	1	LG2		
20	DLV03-047-10	Spring	1	Spring steel		
19	DLV03-047-09	X-ring	1	Rubber		
18	DLV03-042A-03	Cap with chain	1	Assembly		Red
17	DLJ01-007-007	Sealing ring	1	Rubber		
16	DLJ01-007-04	Spring	1	SUS304		
15	DLV03-037-08	Guard knob	1	Brass		
14	GB/T 889.1-2000	Locking nut	1	Steel（Galvanized）		M8
13	DLV03-037-09	Tag	1	Brass		
12	DLV03-047-08	Decoration ring	1	PE		
11	GB/T 889.1-2000	Hand wheel nut	1	Steel（Galvanized）		M12
10	GB/T 97.1-2002	Hand wheel gasket	1	Steel（Galvanized）		Ø32×Ø14.5×2.5
9	DLV03-042A-02	Handwheel	1	Cast iron		Red
8	GB/T 1235-76	Valve stem O-ring	1	Rubber		Ø32×Ø3
7	DLV03-047-06	Top stem	1	Brass		
6	DLV03-047-05	Valve cap	1	LG2		
5	GB/T 1235-76	Valve cap O-ring	1	Rubber		Ø74×Ø2
4	DLV03-047-04	hexagon nut	2	Brass		
3	DLV03-047-03	Press plate	1	Brass		
2	DLV03-047-02	Bottom stem	1	Brass		
1	DLV03-047A-01	Valve body	1	LG2		

Technical Requirements:

1. Assemble it per required and to check if all components are correctly assembled;
2. Handwheel and knob can be rotated flexibly; the close direction of valve shall be marked on the handwheel;
3. The handwheel rotating turns from the closing and complete opening of valve shall be 4-10;
4. The maximum inlet pressure is 20Bar and the outlet pressure is 4.0-8.0bar;
5. Sealing test (under pressure of 22bar and keep for 2 minutes) and pressure test under pressure of 30bar and keep for 2 minutes shall be made after assembly,
no leakage and damage that affect normal operation shall be caused.

Zone	Revision note	Date	Signature	Pressure regulating valve	Code No.
Drawn		Audit		Assembly	W.T. / Scale
Checked		Approved			Hydrotech